SGC Technologies Inc

80.8 MHz Bandpass Filter
11.0 MHz Bandwidth

311243

Typical Performance

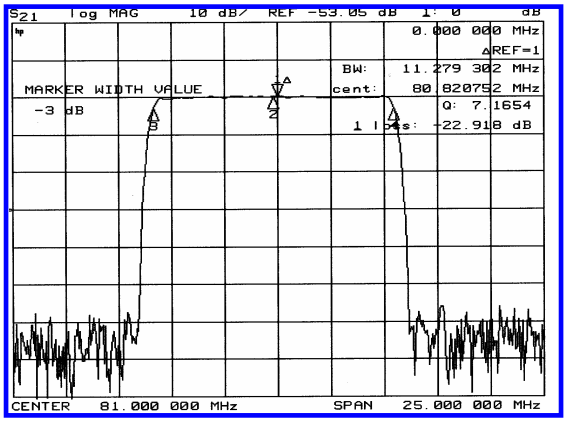

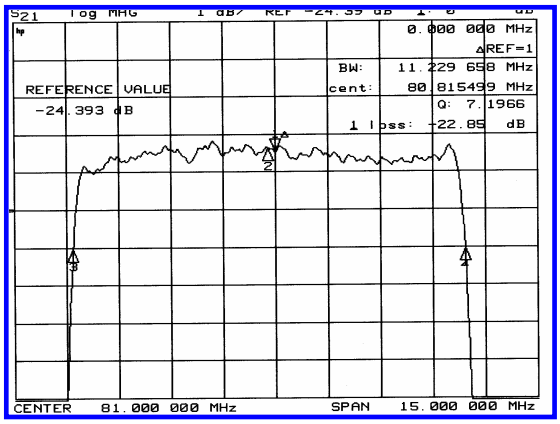

Specification

Parameter	Unit	Min.	Typ.	Max.
Center Frequency	Mhz	80.80	80.85	80.90
Insertion Loss	dB	-	23.0	25.0
3dB Bandwidth	Mhz	11.00	11.20	-
40dB Bandwidth	Mhz	-	12.45	12.65
Passband Ripple	dB	-	0.75	1.00
Group Delay Variation	nsec	-	80	120
Absolute Delay	µsec	-	2.50	-
Ultimate Attenuation	dB	50	60	-
Substrate Material	-	$128LiNbO_3$		

Package Dimension

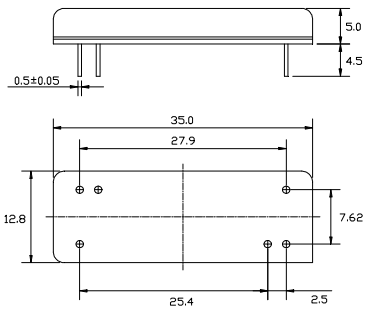

Matching Configuration

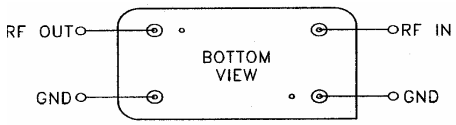

Bottom View
Source / Load Impedance = 50Ω
Ambient Temperature = 25°C

09-05-2001